Artisan™
USA



GRILL GAS SUPPLY CONVERSION KITS

For all Artisan USA Grill Models

TOOLS REQUIRED TO INSTALL THIS KIT:	
ITEM	**DESCRIPTION:**
A	SCREWDRIVER - PHILIPS SIZE # 2
B	SCREWDRIVER - FLAT 1/8" WIDE TIP
C	1/2" WRENCH - OPEN TYPE
D	7/16" WRENCH - OPEN TYPE
E	RATCHETING SOCKET WRENCH - (OPTIONAL)
F	SOCKET EXTENSION DRIVER - 3" (OPTIONAL)
G	1/2" SOCKET - (OPTIONAL)

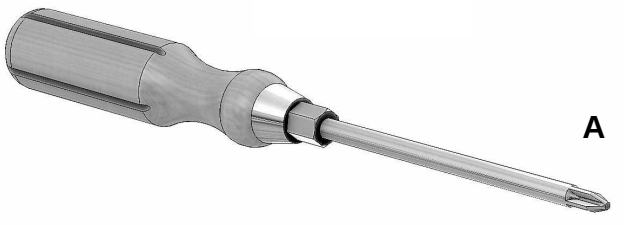

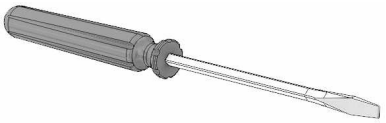

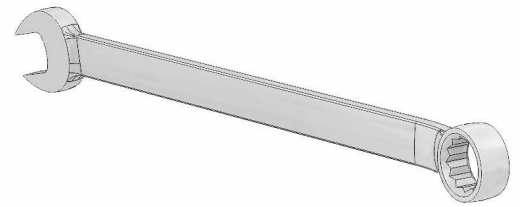

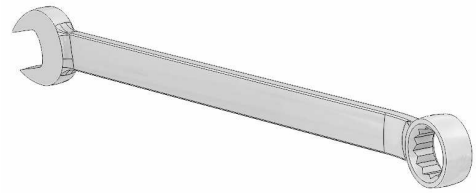

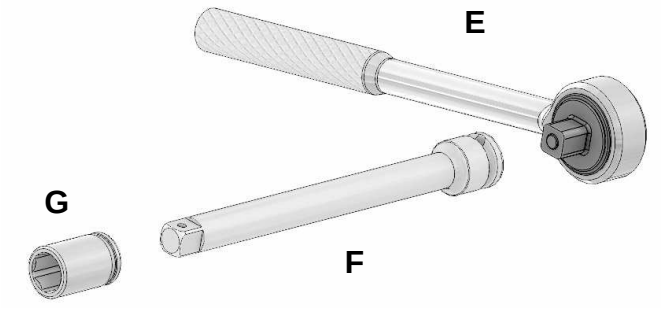

REPLACEMENT PROCEDURE:

ROTISSERIE ORIFICE:

STEP 1:
Detach the front hood assembly by removing the pivoting 1/4" screws and nuts at each end of the side panels (use screwdriver # 2 and 7/16" wrench).

STEP 2:
Remove all grills, warming racks, briquette trays and grill burners from the grill firebox.

STEP 3:
Detach the Rotisserie Panel (32" and 36" grills only) To access the burner orifice behind the panel.
Remove the 4 screws on top and 3 screws at the bottom of the panel.

IMPORTANT: Slide the panel's bottom forward, push down to free the panel and then tilt forward to reach the burner's back side where the orifice is located.

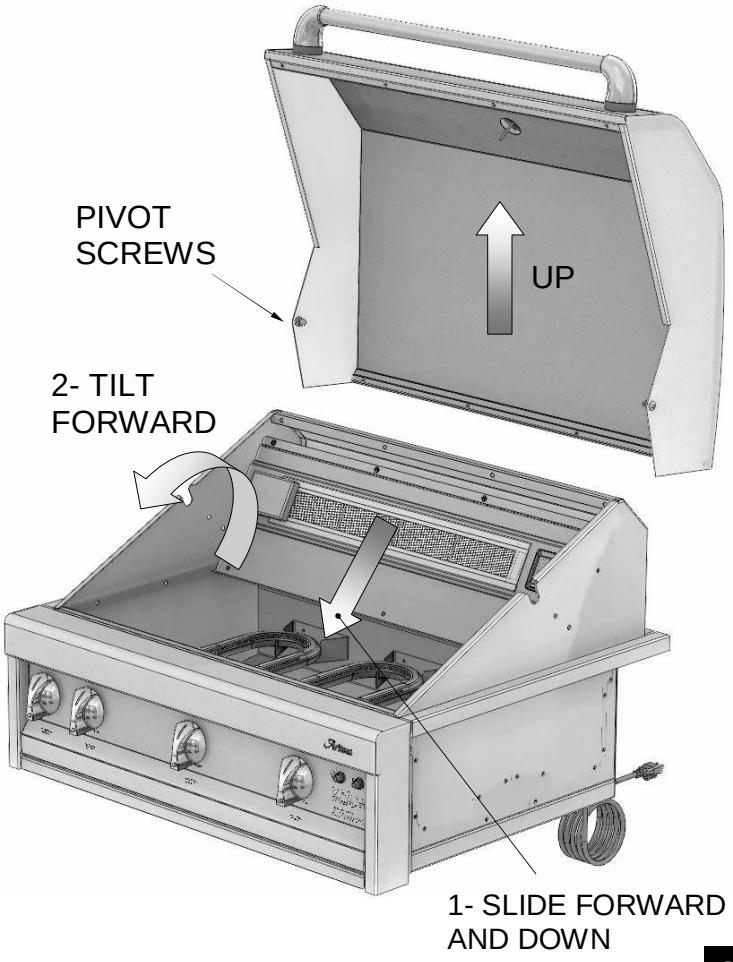

STEP 4:
Remove the Rotisserie orifice with a 1/2" open wrench from the 3/8" compression elbow fitting.
Install the replacement orifice for the proper fuel you are replacing. (See orifice kits at the end of this booklet).
Tighten the orifice to ensure no leaks will occur.

Note: Image at right shown from the back of the grill for illustration purposes only. Replacement must be done by removing the Rotisserie Panel from the front of the unit.

IMPORTANT:
Verify that the igniter cable is properly secured before reassembly.

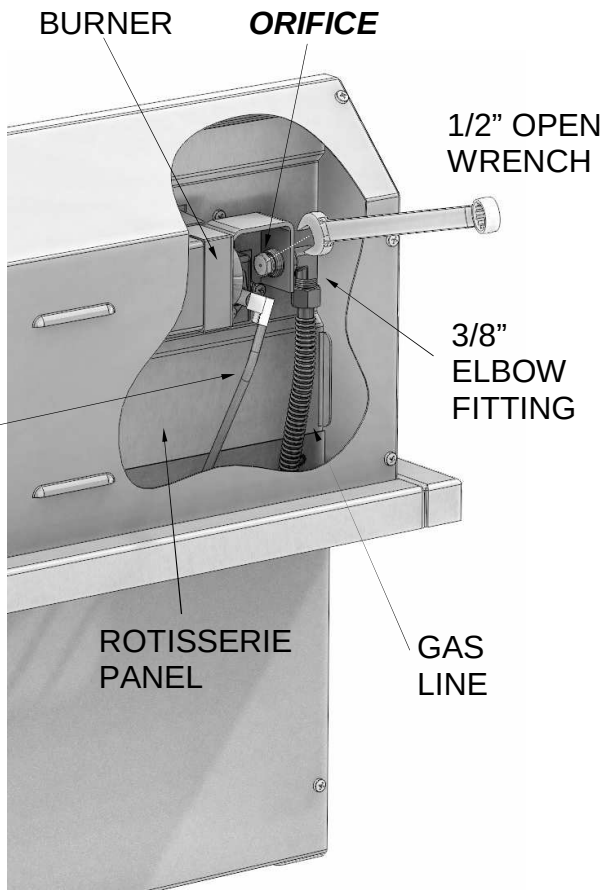

STEP 5:
Reassemble the Rotisserie Panel by reversing the procedure. Tilt the panel backwards, and insert the top pushing up and then backwards at the bottom to set the panel properly. Fasten the top 5 and bottom 3 screws to secure the panel in place.

GRILL BURNER ORIFICES:

(USING STANDARD TOOLS)

STEP 6:
Remove the gas Knobs from all the valves.
Remove the Front Panel by unscrewing the 4 (1/4") retaining screws (2 on each side) and slide the front panel forward.

STEP 7:
Replace each of the burners orifices on the valve stems using a 1/2" open wrench.

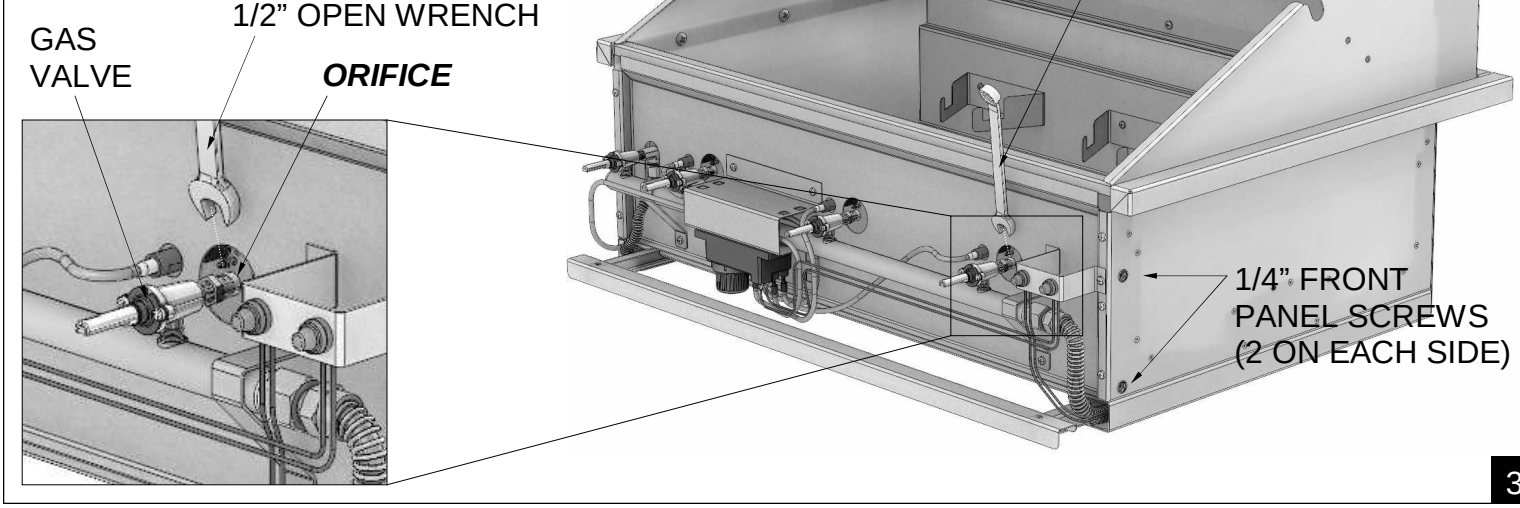

GRILL BURNER ORIFICES

(USING OPTIONAL TOOLS - RECOMMENDED)

STEP 6:
Using the ratcheting wrench, a 3” driver extender and a 1/2” socket, remove the orifices from the inside of the grill without removing the front assembly as shown on the illustration at right.

STEP 7:
Replace each of the orifices on each valve In the same fashion.

DO NOT OVER TIGHTEN !

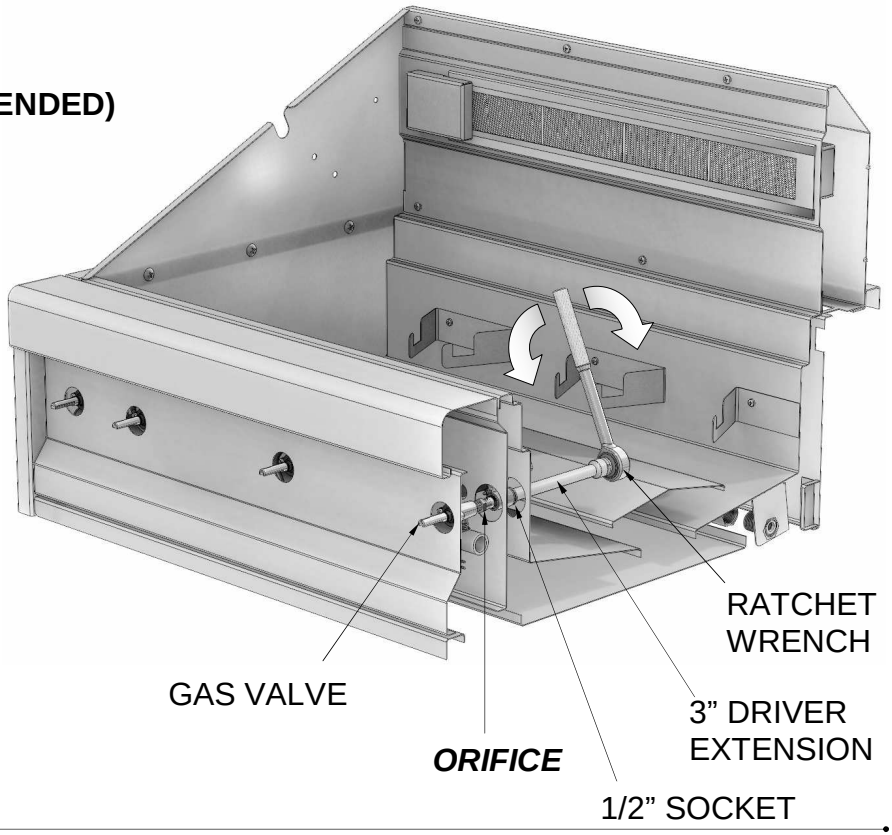

GAS PRESSURE REGULATOR INSTALLATION:

Each Conversion Kit (LP or NG) comes with it’s own pressure regulator. LP Kits have an additional 1/2” NPTF to 3/8” ODF adapter fitting to connect to the LP tank hose/regulator assembly. The general outline of the connections are shown on these illustrations:

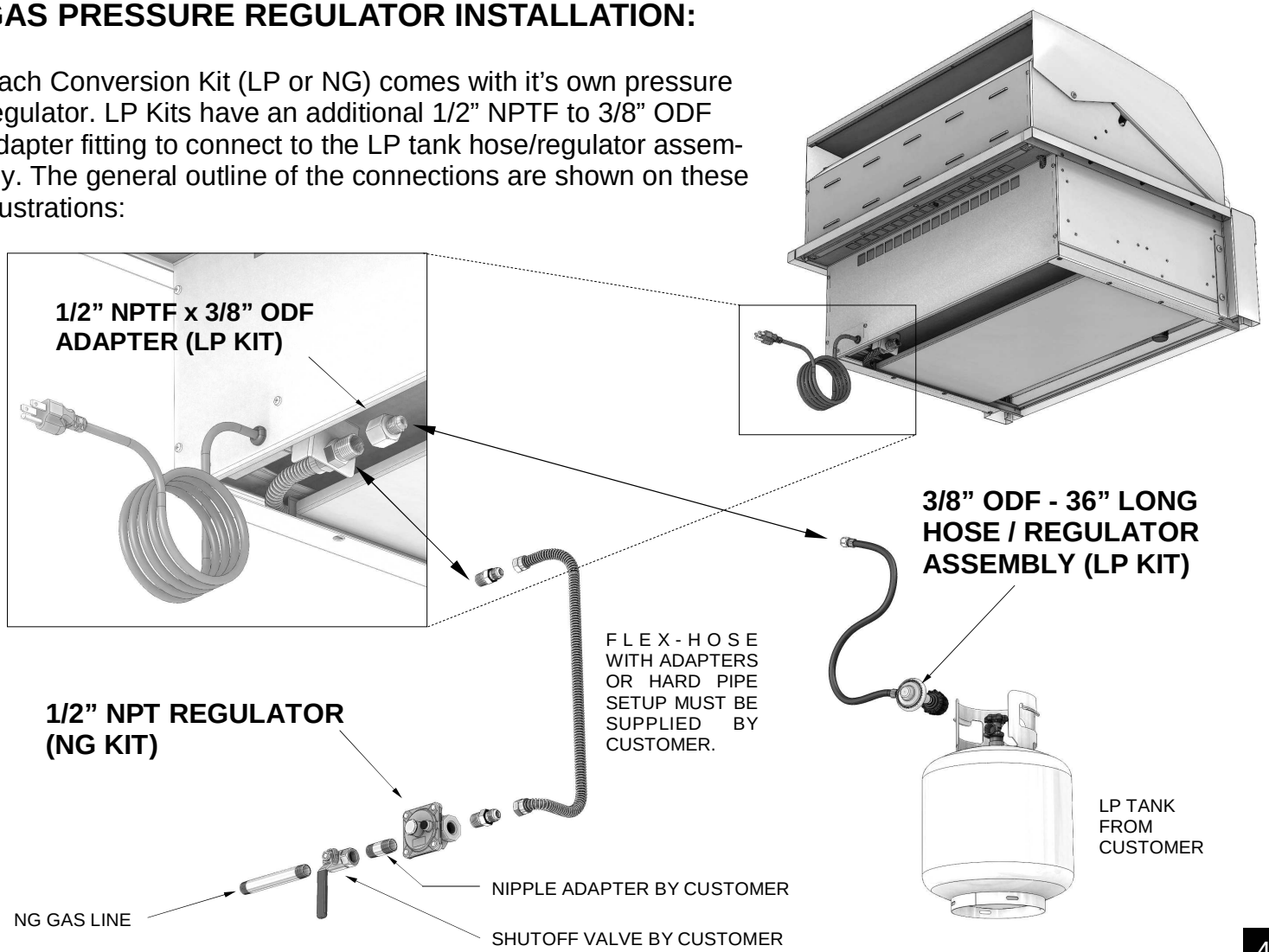

LOW HEAT SETTING ADJUSTMENT:

NOTE:
THE LOW HEAT SETTING ON YOUR GRILL IS PRESET AT THE FACTORY FOR THE FUEL IT WAS DESIGNED TO WORK WITH.

ADJUST THE LOW HEAT SETTING WHEN CHANGING FUELS OR WHEN ALTITUDE OR OTHER ENVIRONMENTAL FACTORS ARE CAUSING POOR, LOW HEAT, PERFORMANCE.

WARNING

NEVER ADJUST THE BURNER SO LOW THAT IT MAY GO OUT DURING USE. DO NOT OPERATE THE GRILL WITH THE LOW HEAT SCREW REMOVED.

GAS CAN ESCAPE AND CAUSE A POTENTIALLY HAZARDOUS CONDITION.

ADJUSTMENT STEPS:

1. Follow lighting instructions by setting the control knob on "HI" and allow the burner to preheat for 10 minutes.
2. Turn the control knob to "LOW" and wait for the burner temperature to drop and stabilize.
3. ***Attempting adjustment at any setting other than LOW can create a dangerous condition.***
4. Remove knob by pulling straight away from control panel.
5. Insert a small blade (1/8" wide) screwdriver into the valve stem to begin the adjustment.
6. Turn counter-clockwise to INCREASE the low heat flame, or clockwise to DECREASE the blame height. (*see figure at right).*

1/8" FLAT SCREWDRIVER

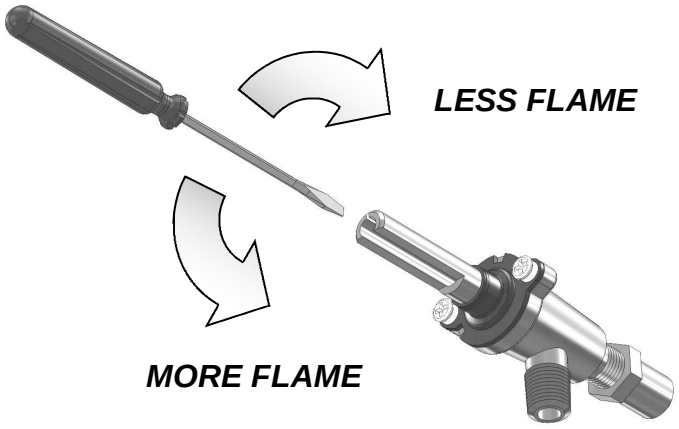

GAS VALVE

Adjust the flames so the burner is fully lit around the perimeter when the knob is in the LOW position. Do not adjust the burner flame so low that it may go out during use. Once proper adjustment is reached, reattach the knob by pushing onto stem.

Your *Artisan*™ Grill is now ready for use with the new fuel.

GAS CONVERSION KIT NUMBERS		
GRILL SIZE:	**NG TO LP**	**LP TO NG**
ART-26	190-0040	190-0044
ART-32	190-0041	190-0045
ART-36	190-0042	190-0046

CONVERTION KIT FOR ART-26 BBQ FROM NG TO LP FUEL

FRONT VIEW	SIDE VIEW	ISO VIEW	ITEM:



SCALE 1:1

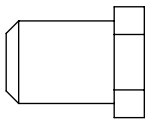

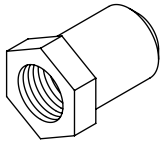

GRILL BURNER ORIFICE
SIZE: 57 GA.
PART#: 220-0398
QTY: 2

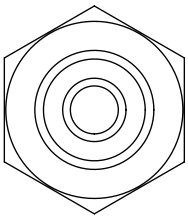

SCALE 1:1

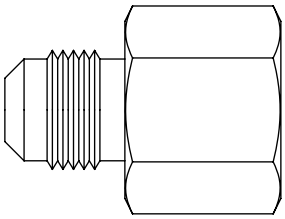

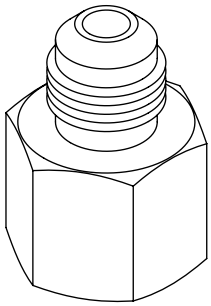

FITTING ADAPTOR
SIZE: 3/8" ODF x 1/2" NPT
PART#: 220-0403
QTY: 1

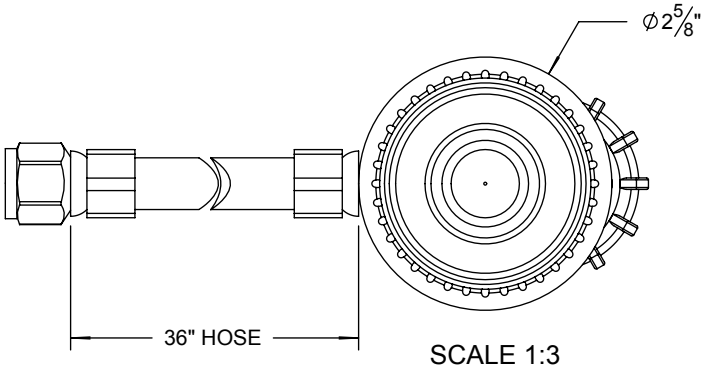

SCALE 1:3

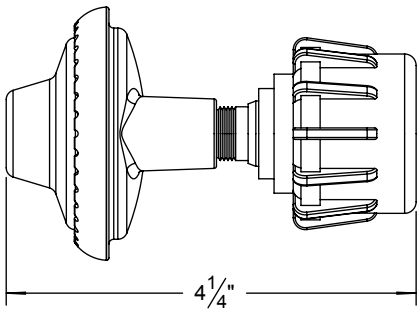

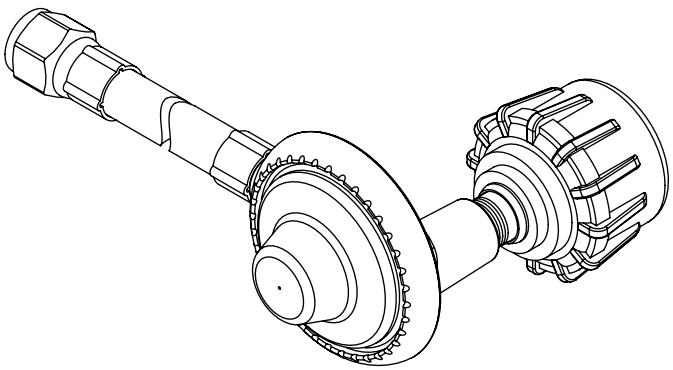

GAS REGULATOR w/ HOSE
SIZE: 36" HOSE - 10" W.C.
PART#: 220-0301
QTY: 1

Artisan SUPERIOR EQUIPMENT SOLUTIONS 7039 EAST SLAUSON AVENUE COMMERCE, CA. 90040	THE INFORMATION CONTAINED IN THIS DRAWING IS THE SOLE PROPERTY OF SUPERIOR EQUIPMENT SOLUTIONS INC. ANY REPRODUCTION IN PART OR AS A WHOLE WITHOUT WRITTEN PERMISSION FROM SUPERIOR EQUIPMENT SOLUTIONS, INC. IS PROHIBITED.	PROJECT TITLE: **ARTISAN CONVERSION KITS**	DRAWING NO.: **190-0040**
	DRAWN BY: ADRIAN CRISCI **CREATED:** 6/2/2011 11:30:17 AM	DRAWING TITLE: **ART-26/NG-LP**	SHEET 1 OF 1

CONVERTION KIT FOR ART-32 BBQ FROM NG TO LP FUEL

FRONT VIEW	SIDE VIEW	ISO VIEW	ITEM:



SCALE 1:1

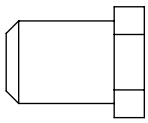

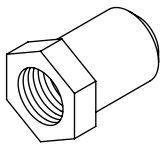

GRILL BURNER ORIFICE
SIZE: 57 GA.
PART#: 220-0398
QTY: 3

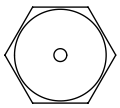

SCALE 1:1

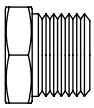

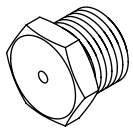

ROTISSERIE BURNER ORIFICE
SIZE: 57 GA.
PART#: 220-0284
QTY: 1

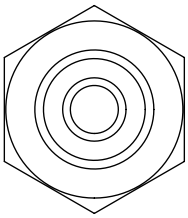

SCALE 1:1

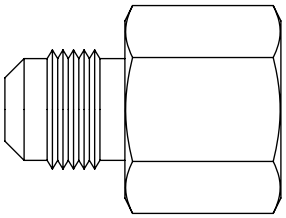

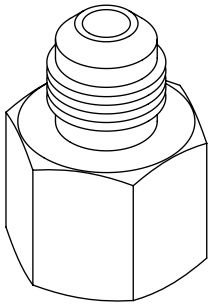

FITTING ADAPTOR
SIZE: 3/8" ODF x 1/2" NPT
PART#: 220-0403
QTY: 1

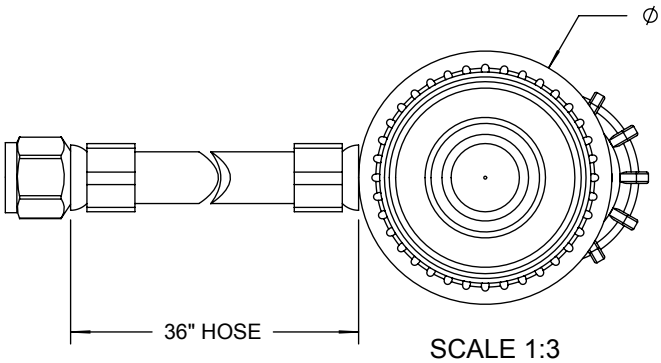

SCALE 1:3

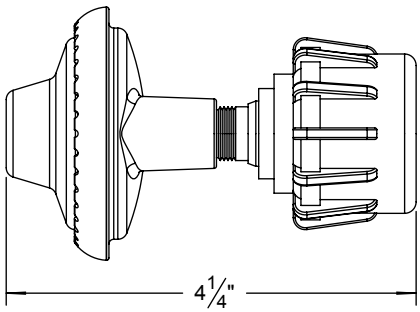

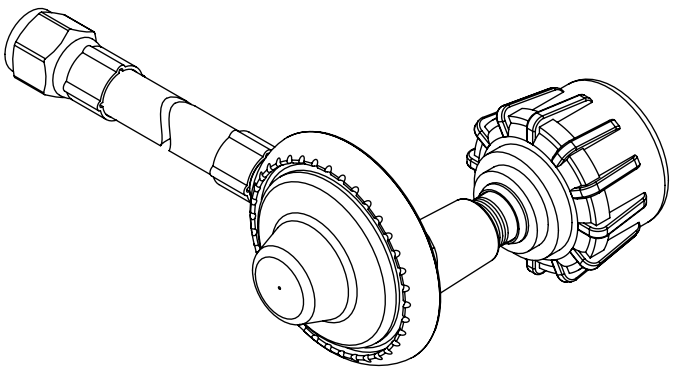

GAS REGULATOR w/ HOSE
SIZE: 36" HOSE - 10" W.C.
PART#: 220-0301
QTY: 1

Artisan SUPERIOR EQUIPMENT SOLUTIONS 7039 EAST SLAUSON AVENUE COMMERCE, CA. 90040	THE INFORMATION CONTAINED IN THIS DRAWING IS THE SOLE PROPERTY OF SUPERIOR EQUIPMENT SOLUTIONS INC. ANY REPRODUCTION IN PART OR AS A WHOLE WITHOUT WRITTEN PERMISSION FROM SUPERIOR EQUIPMENT SOLUTIONS, INC. IS PROHIBITED.	PROJECT TITLE: **ARTISAN CONVERSION KITS**	DRAWING NO.: **190-0041**
	DRAWN BY: ADRIAN CRISCI **CREATED:** 6/2/2011 11:30:17 AM	DRAWING TITLE: **ART-32/NG-LP**	SHEET 1 OF 1

CONVERTION KIT FOR ART-36 BBQ FROM NG TO LP FUEL

FRONT VIEW	SIDE VIEW	ISO VIEW	ITEM:
 SCALE 1:1	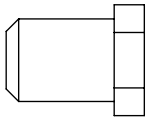	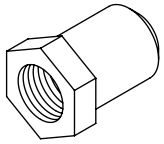	**GRILL BURNER ORIFICE** **SIZE: 57 GA.** **PART#: 220-0398** **QTY: 3**
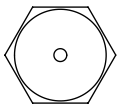 SCALE 1:1	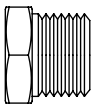	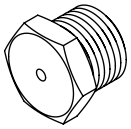	**ROTISSERIE BURNER ORIFICE** **SIZE: 57 GA.** **PART#: 220-0284** **QTY: 1**
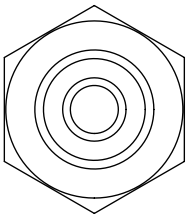 SCALE 1:1	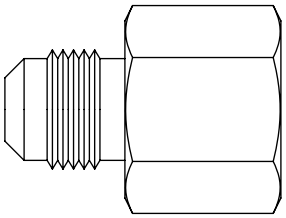	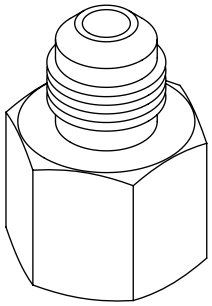	**FITTING ADAPTOR** **SIZE: 3/8" ODF x 1/2" NPT** **PART#: 220-0403** **QTY: 1**

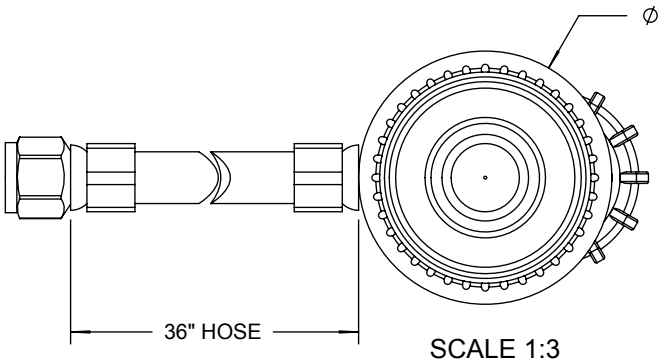

SCALE 1:3

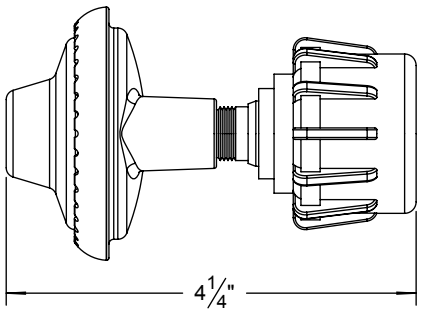

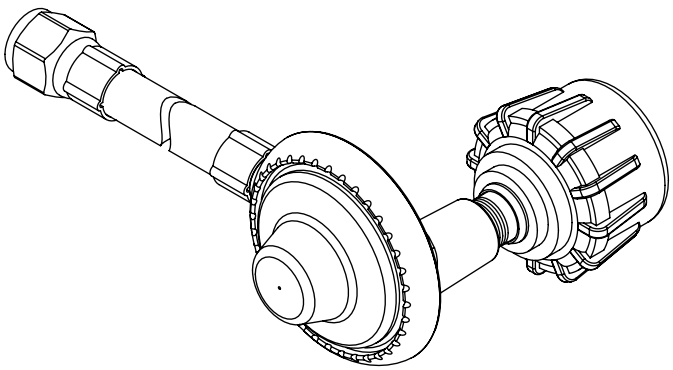

GAS REGULATOR w/ HOSE
SIZE: 36" HOSE - 10" W.C.
PART#: 220-0301
QTY: 1

Artisan SUPERIOR EQUIPMENT SOLUTIONS 7039 EAST SLAUSON AVENUE COMMERCE, CA. 90040	THE INFORMATION CONTAINED IN THIS DRAWING IS THE SOLE PROPERTY OF SUPERIOR EQUIPMENT SOLUTIONS INC. ANY REPRODUCTION IN PART OR AS A WHOLE WITHOUT WRITTEN PERMISSION FROM SUPERIOR EQUIPMENT SOLUTIONS, INC. IS PROHIBITED.	PROJECT TITLE: **ARTISAN CONVERSION KITS**	DRAWING NO.: **190-0042**
	DRAWN BY: ADRIAN CRISCI **CREATED:** 6/2/2011 11:30:17 AM	DRAWING TITLE: **ART-36/NG-LP**	SHEET 1 OF 1

CONVERTION KIT FOR ART-26 BBQ FROM LP TO NG FUEL

FRONT VIEW	SIDE VIEW	ISO VIEW	ITEM:



SCALE 1:1

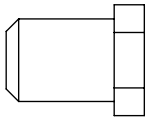

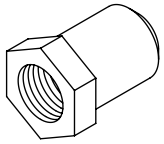

GRILL BURNER ORIFICE
SIZE: 50 GA.
PART#: 220-0397
QTY: 2

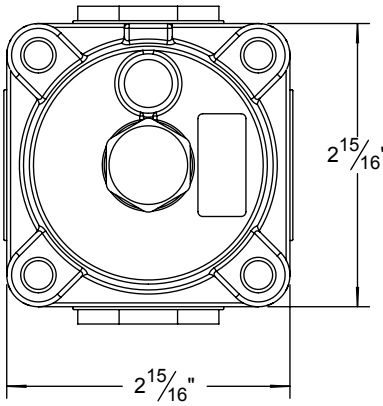

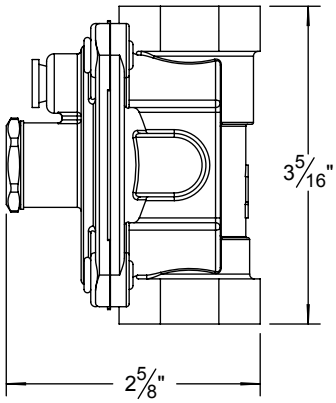

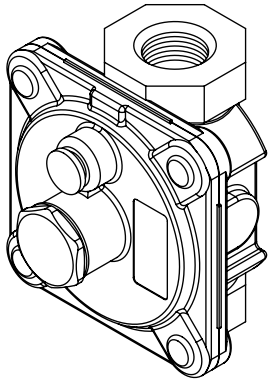

SCALE 1:2

GAS REGULATOR
SIZE: 1/2" NPT - 5" W.C.
PART#: 220-0280
QTY: 1

Artisan
SUPERIOR EQUIPMENT SOLUTIONS
7039 EAST SLAUSON AVENUE
COMMERCE, CA. 90040

THE INFORMATION CONTAINED IN THIS DRAWING IS THE SOLE PROPERTY OF SUPERIOR EQUIPMENT SOLUTIONS INC. ANY REPRODUCTION IN PART OR AS A WHOLE WITHOUT WRITTEN PERMISSION FROM SUPERIOR EQUIPMENT SOLUTIONS, INC. IS PROHIBITED.

DRAWN BY: ADRIAN CRISCI
CREATED: 6/2/2011 11:30:17 AM

PROJECT TITLE: **ARTISAN CONVERSION KITS**

DRAWING TITLE: **ART-26/LP-NG**

DRAWING NO.: **190-0044**

CONVERTION KIT FOR ART-32 BBQ FROM LP TO NG FUEL

FRONT VIEW	SIDE VIEW	ISO VIEW	ITEM:
 SCALE 1:1	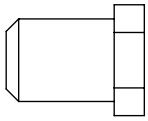	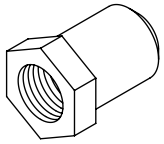	**GRILL BURNER ORIFICE** **SIZE: 50 GA.** **PART#: 220-0397** **QTY: 3**
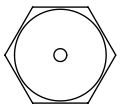 SCALE 1:1	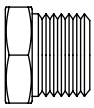	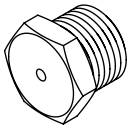	**ROTISSERIE BURNER ORIFICE** **SIZE: 50 GA.** **PART#: 220-0283** **QTY: 1**
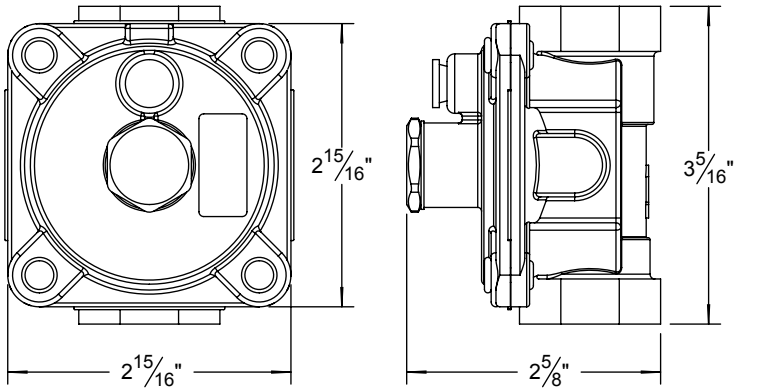 SCALE 1:2			**GAS REGULATOR** **SIZE: 1/2" NPT - 5" W.C.** **PART#: 220-0280** **QTY: 1**

THE INFORMATION CONTAINED IN THIS DRAWING IS THE SOLE PROPERTY OF SUPERIOR EQUIPMENT SOLUTIONS INC. ANY REPRODUCTION IN PART OR AS A WHOLE WITHOUT WRITTEN PERMISSION FROM SUPERIOR EQUIPMENT SOLUTIONS, INC. IS PROHIBITED.

Artisan
SUPERIOR EQUIPMENT SOLUTIONS
7039 EAST SLAUSON AVENUE
COMMERCE, CA. 90040

DRAWN BY: ADRIAN CRISCI
CREATED: 6/2/2011 11:30:17 AM

PROJECT TITLE: **ARTISAN CONVERSION KITS**

DRAWING TITLE: **ART-32/LP-NG**

DRAWING NO.: **190-0045**

CONVERTION KIT FOR ART-36 BBQ FROM LP TO NG FUEL

FRONT VIEW	SIDE VIEW	ISO VIEW	ITEM:
 SCALE 1:1	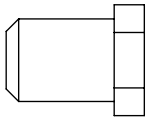	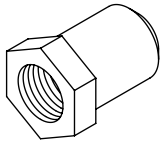	**GRILL BURNER ORIFICE** **SIZE: 50 GA.** **PART#: 220-0397** **QTY: 3**
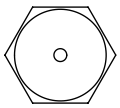 SCALE 1:1	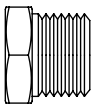	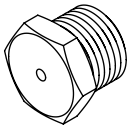	**ROTISSERIE BURNER ORIFICE** **SIZE: 50 GA.** **PART#: 220-0283** **QTY: 1**
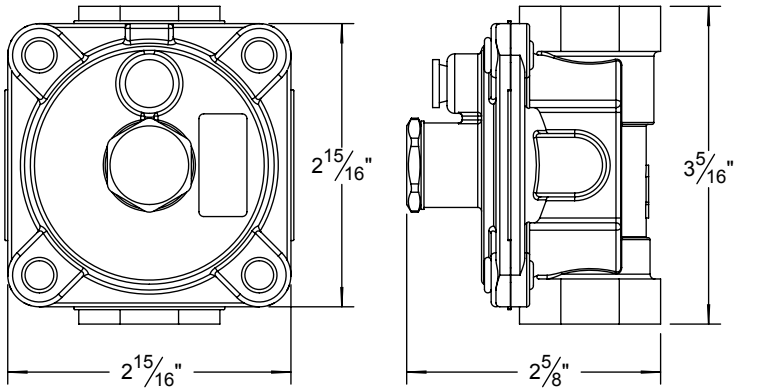 SCALE 1:2			**GAS REGULATOR** **SIZE: 1/2" NPT - 5" W.C.** **PART#: 220-0280** **QTY: 1**

THE INFORMATION CONTAINED IN THIS DRAWING IS THE SOLE PROPERTY OF SUPERIOR EQUIPMENT SOLUTIONS INC. ANY REPRODUCTION IN PART OR AS A WHOLE WITHOUT WRITTEN PERMISSION FROM SUPERIOR EQUIPMENT SOLUTIONS, INC. IS PROHIBITED.

Artisan
SUPERIOR EQUIPMENT SOLUTIONS
7039 EAST SLAUSON AVENUE
COMMERCE, CA. 90040

DRAWN BY: ADRIAN CRISCI
CREATED: 6/2/2011 11:30:17 AM

PROJECT TITLE: **ARTISAN CONVERSION KITS**

DRAWING TITLE: **ART-36/LP-NG**

DRAWING NO.: **190-0046**

Artisan™ Grill Gas Supply
Conversion Instructions
Artisan™ USA Grills
All Rights Reserved • 09/2011